Electrolux PROFESSIONAL

Modular Cooking Range Line 900XP Electric Cylindrical Boiling Pan 150lt automatic refill

ITEM #

MODEL #

NAME #

SIS #

AIA #

391121 (E9BSEHIRFR) 150-lt electric Boiling Pan with pressure switch, indirect heating, with automatic double-jacket refill

Short Form Specification

Item No.

To be installed on cantilever systems but also incorporates fixing points for bridging. Incoloy armoured elements with safety thermostat positioned in the jacket cavity base. Automatic water refill through electrovalve. Exterior panels of unit in stainless steel with Scotch Brite finish. Lid made in 3mm thick AISI 316L stainless steel. Pressed well with rounded edges manufactured from AISI 316L stainless steel. Right-angled side edges to allow flush-fitting junction between units. Includes safety valve to control working pressure. Temperature limiter for power regulation allowing precise temperature cooking.

APPROVAL:

Main Features

- Round kettle is suitable to cook, sauté or poach all kinds of produce.
- Produce is uniformly heated in the base and side walls of the kettle by an indirect heating system that uses integrally generated saturated steam at a temperature of 110° C in the jacket.
- Incoloy armoured elements with safety thermostat positioned in the jacket cavity base.
- External valve allows to manually evacuate excess air accumulated in the jacket during heating phase.
- Appliance is IPX5 water resistance certified.
- Manometer allows to correctly control the functioning of the pan.
- Energy regulation through a control knob.
- Safety thermostat protects against low water level.
- Safety valve avoids overpressure of the steam in the jacket.
- No overshooting of cooking temperatures, fast reaction.
- Large capacity food tap enables safe and effortless discharging of contents.
- Ergonomic: the depth of the vessel facilitates stirring the food, also the most delicate food.
- Discharge tube and tap are very easy to clean from outside.
- Solenoid valve automatically refills vessel with water.
- Smooth large surfaces, easy access for cleaning.
- The special design of the control knob system guarantees against water infiltration.
- Minimum load for correct funtioning is 20 liters.

Construction

- Pressed cooking vessel in 316L AISI Stainless steel.
- All exterior panels in Stainless Steel with Scotch Brite finishing.
- Model has right-angled side edges to allow flush fitting joints between units, eliminating gaps and possible dirt traps.

Sustainability

- Kettle shall be double jacketed including high quality thermal insulation of the pan, saving energy and keeping ambient temperature low.
- Firmly fitting cover to reduce cooking time and save energy costs.
- Closed heating system – no waste of energy.
- Pressure switch control monitors energy and water consumption.

Included Accessories

- 1 of Water additive against corrosion for indirect boiling pans — PNC 927222

Optional Accessories

- Junction sealing kit — PNC 206086 ❑

• Kit 4 wheels - 2 swivelling with brake - it is mandatory to install Base support and wheels	PNC 206135	❑
• Flanged feet kit	PNC 206136	❑
• Frontal kicking strip for concrete installation, 800mm	PNC 206148	❑
• Frontal kicking strip for concrete installation, 1000mm	PNC 206150	❑
• Frontal kicking strip for concrete installation, 1200mm	PNC 206151	❑
• Frontal kicking strip for concrete installation, 1600mm	PNC 206152	❑
• Frontal kicking strip, 800mm (not for refr-freezer base)	PNC 206176	❑
• Frontal kicking strip, 1000mm (not for refr-freezer base)	PNC 206177	❑
• Frontal kicking strip, 1200mm (not for refr-freezer base)	PNC 206178	❑
• Frontal kicking strip, 1600mm (not for refr-freezer base)	PNC 206179	❑
• Pair of side kicking strips (not for refr-freezer base)	PNC 206180	❑
• 2 panels for service duct for single installation	PNC 206181	❑
• 2 panels for service duct for back to back installation	PNC 206202	❑
• Kit 4 feet for concrete installation (not for 900 line free standing grill)	PNC 206210	❑
• Kit for automatic depressuring of the double jacket for 100/150 lt indirect and autoclave boiling pans	PNC 206279	❑
• Chimney upstand, 800mm	PNC 206304	❑
• Base support for feet or wheels - 800mm (700/900)	PNC 206367	❑
• Base support for feet or wheels - 1200mm (700/900)	PNC 206368	❑
• Base support for feet or wheels - 1600mm (700/900)	PNC 206369	❑
• Base support for feet or wheels - 2000mm (700/900)	PNC 206370	❑
• Rear paneling - 800mm (700/900)	PNC 206374	❑
• Rear paneling - 1000mm (700/900)	PNC 206375	❑
• Rear paneling - 1200mm (700/900)	PNC 206376	❑
• 2 side covering panels for free standing appliances	PNC 216134	❑
• Filter for total demineralization	PNC 864367	❑
• Trolley with lifting & removable tank	PNC 922403	❑
• 2-section universal basket for 150lt boiling pans	PNC 925019	❑
• Measuring rod for 150 l Boiling Pan	PNC 927002	❑
• Water additive against corrosion for indirect boiling pans	PNC 927222	❑

The company reserves the right to make modifications to the products without prior notice. All information correct at time of printing.

Modular Cooking Range Line 900XP Electric Cylindrical Boiling Pan 150lt automatic refill

Front

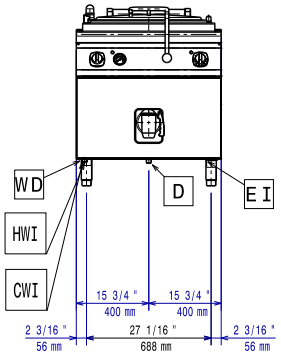

Side

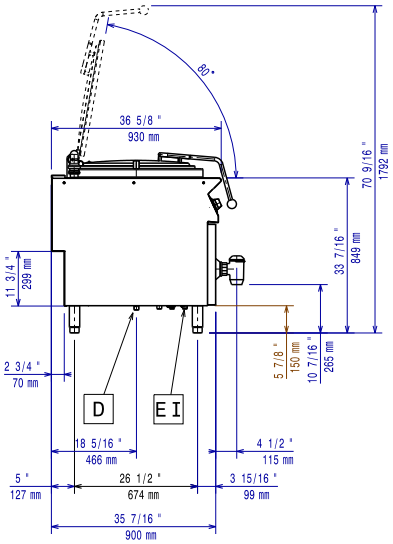

CWI1	=	Cold Water inlet 1 (cleaning)
D	=	Drain
EI	=	Electrical inlet (power)
HWI	=	Hot water inlet

Top

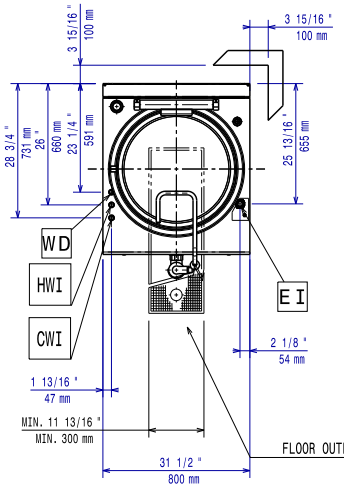

Electric

Supply voltage:	
391121 (E9BSEHIRFR)	380-400 V/3N ph/50/60 Hz
Total Watts:	21.5 kW
Predisposed for:	380-400V 3N~ 50/60Hz 19,5-21,5kW

Key Information:

Pan useful capacity:	143 lt
Vessel (round) diameter:	600 mm
Net weight:	135 kg
Shipping weight:	132 kg
Shipping height:	1180 mm
Shipping width:	1140 mm
Shipping depth:	880 mm
Shipping volume:	1.18 m³

No clearance needed on rear sides of unit if wall is of non combustible type. If wall is combustible, minimum 50 mm wall clearance should be maintained.

Certification group:	N9PIE

The company reserves the right to make modifications to the products without prior notice. All information correct at time of printing.